Panasonic Projector

PT-JX200H

Excluding the accessary

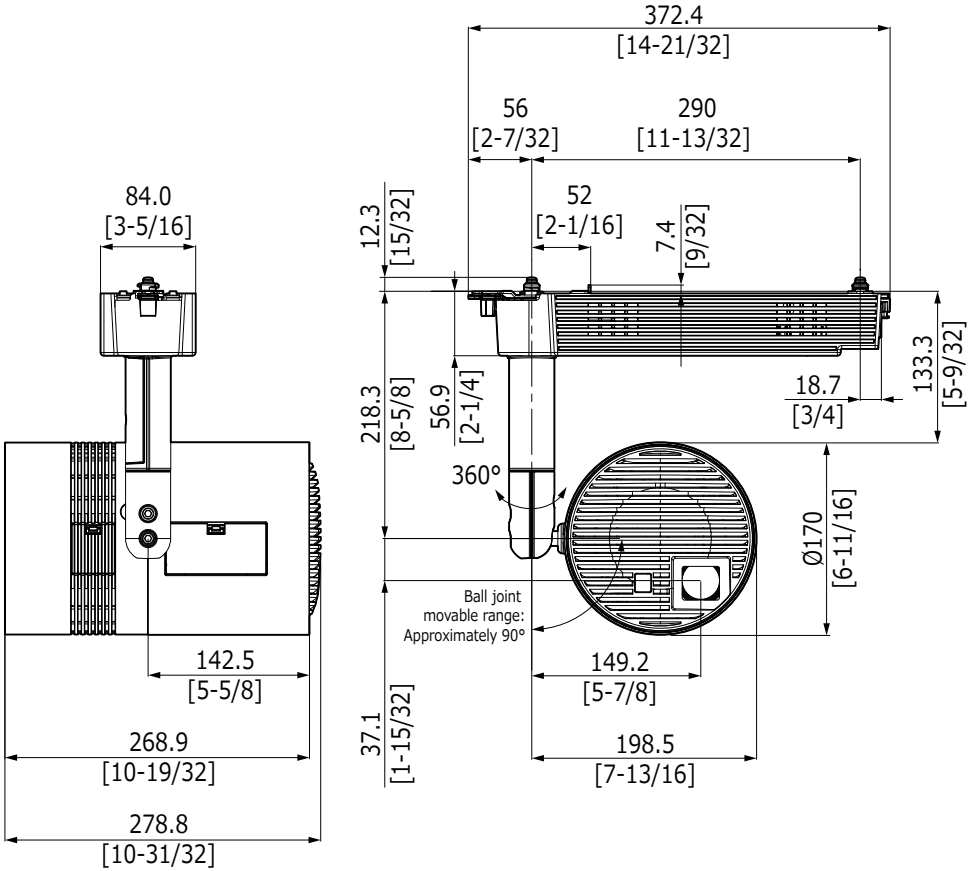

Including the accessary

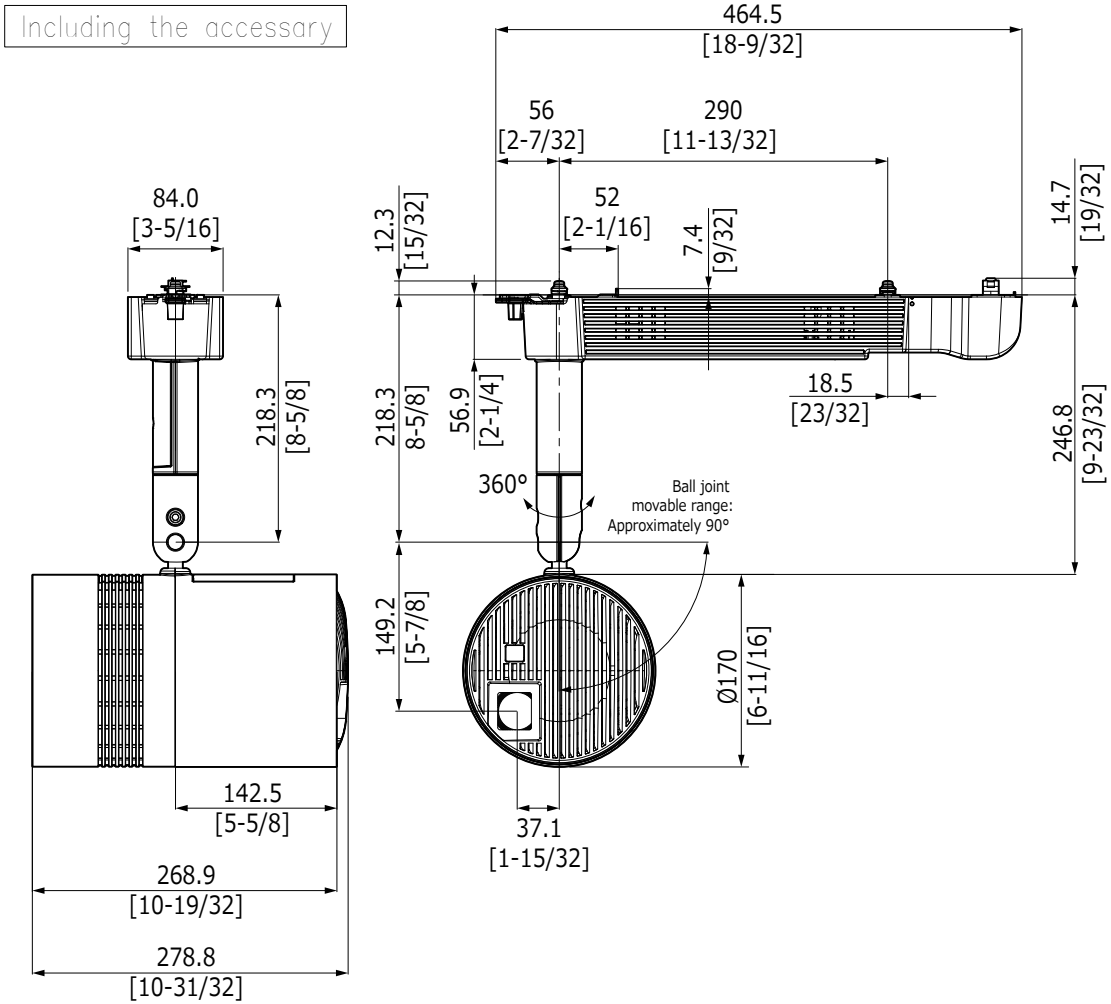

mm [inches]